CENTRAL LOCKING CONNECTION DIAGRAMS FOR RHINO GTS24V CAR ALARM

Note: When fitting a regular 12VDC Central Locking Kit, you can use an 8 amp 24-12VDC voltage reducer or you can source +12V directly from the positive terminal of the vehicle's "low side" battery. Ensure that you use a heavy gauge wire. This will not effect the battery, as the kit only draws current momentarily on lock & unlock.
If unsure, please call Rhino for technical support.

FOR NEGATIVE PULSE CENTRAL LOCKING SYSTEMS

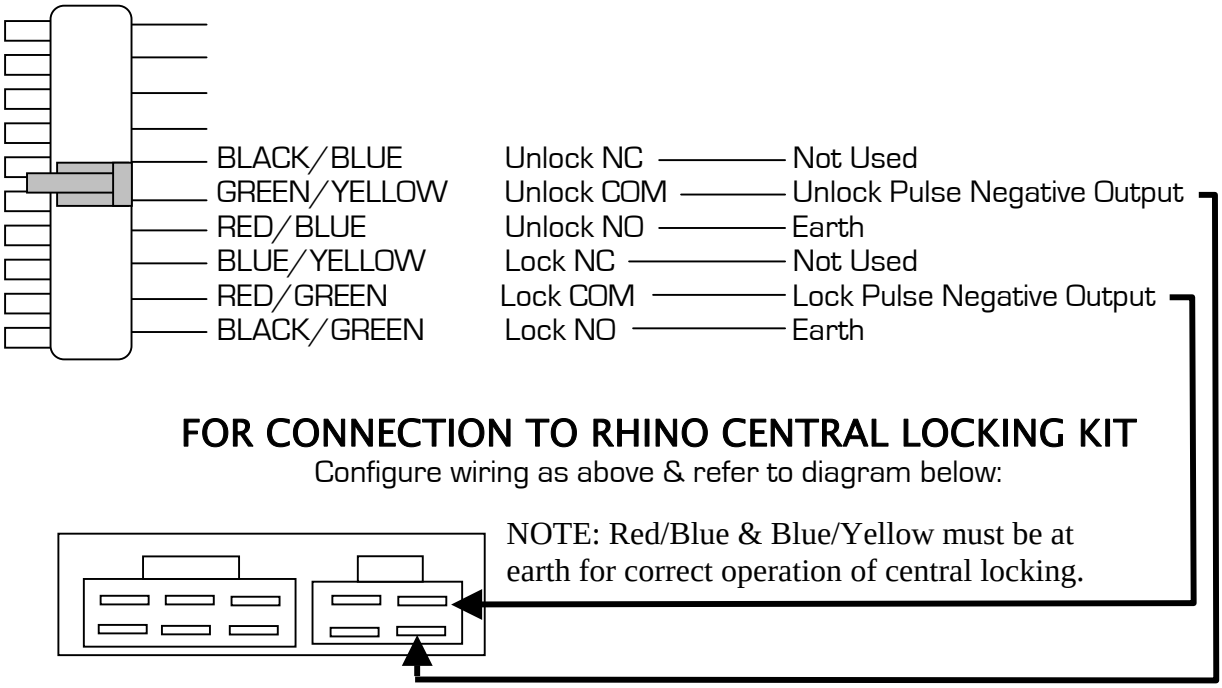

FOR CONNECTION TO RHINO CENTRAL LOCKING KIT

Configure wiring as above & refer to diagram below:

INSTALLING A NEW MOTOR: Often required in vehicles that have factory locking but have no motor in the driver's door, or you would like "keyless entry" on driver's door.

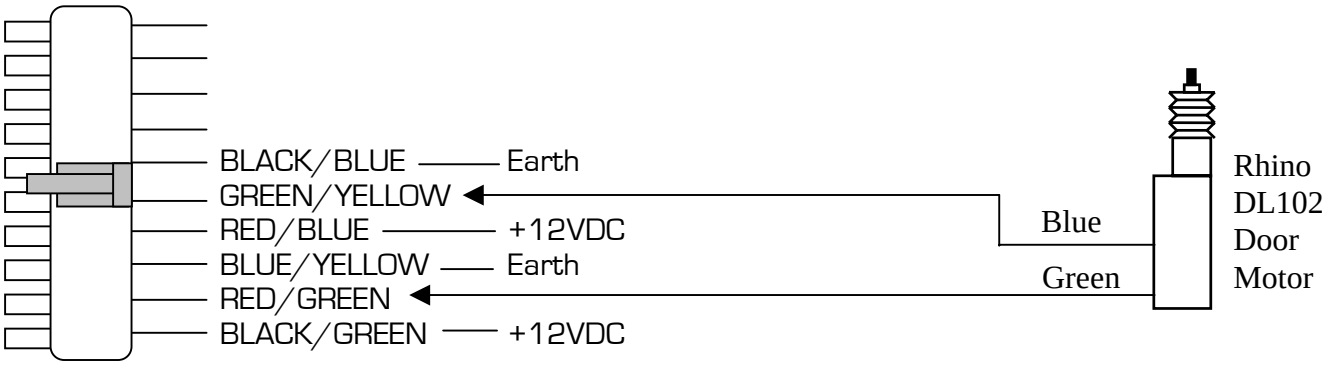

FOR POSITIVE PULSE CENTRAL LOCKING SYSTEMS

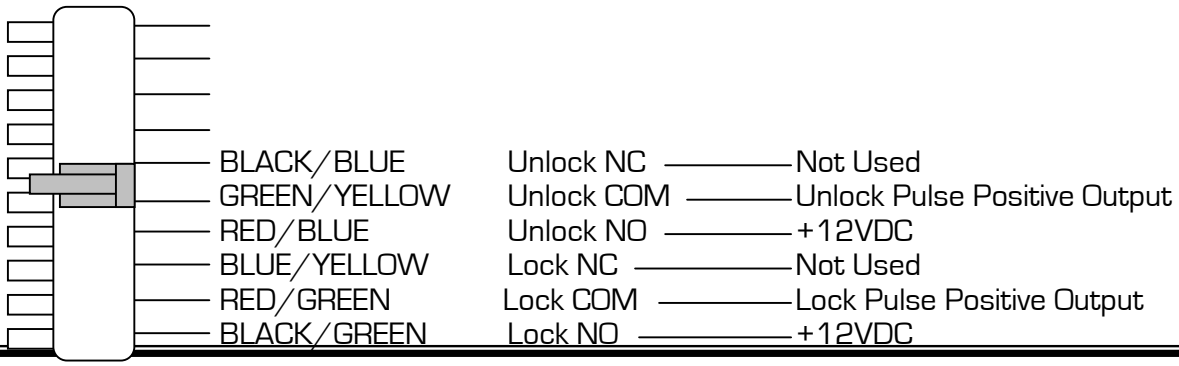

FOR POSITIVE AT REST THEN GOING NEGATIVE Connect Red/Blue & Black Green to Earth
FOR NEGATIVE AT REST THEN GOING POSITIVE Connect Red/Blue & Black Green to +12VDC

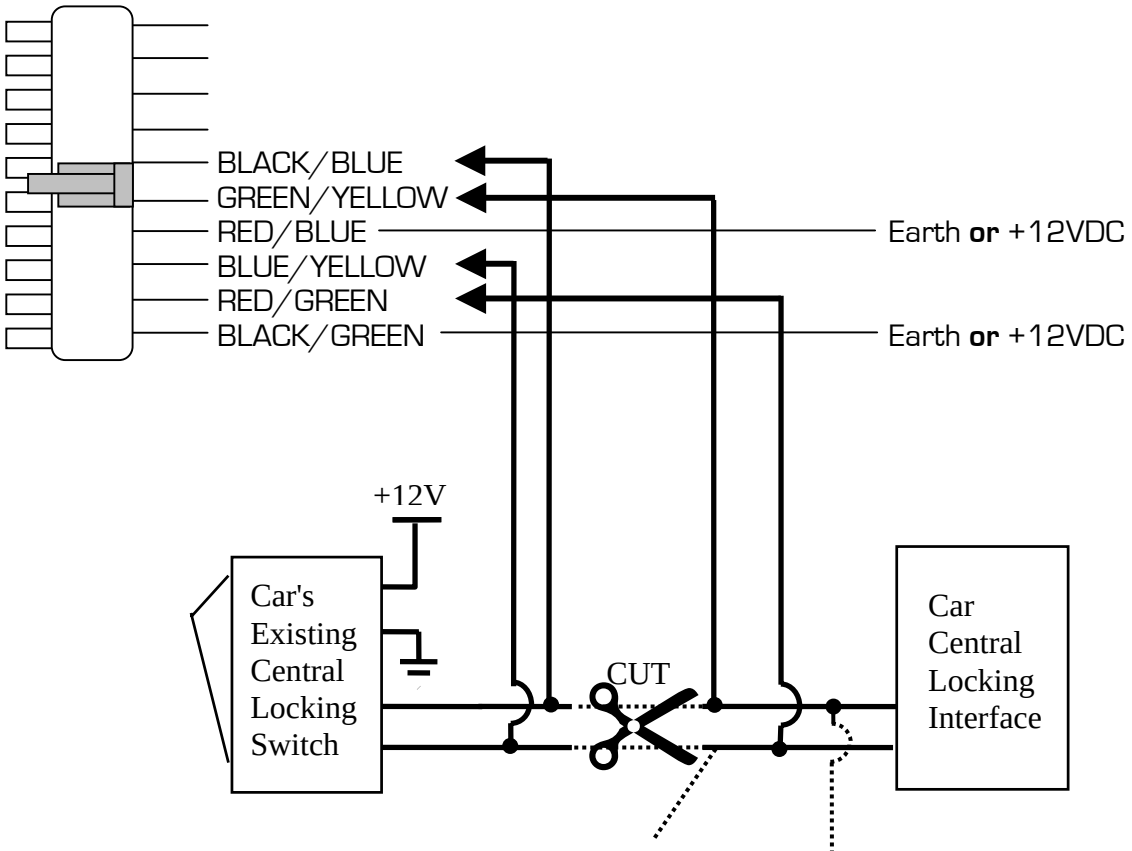

For Floating Switches: Neither +12V or Earth at Rest
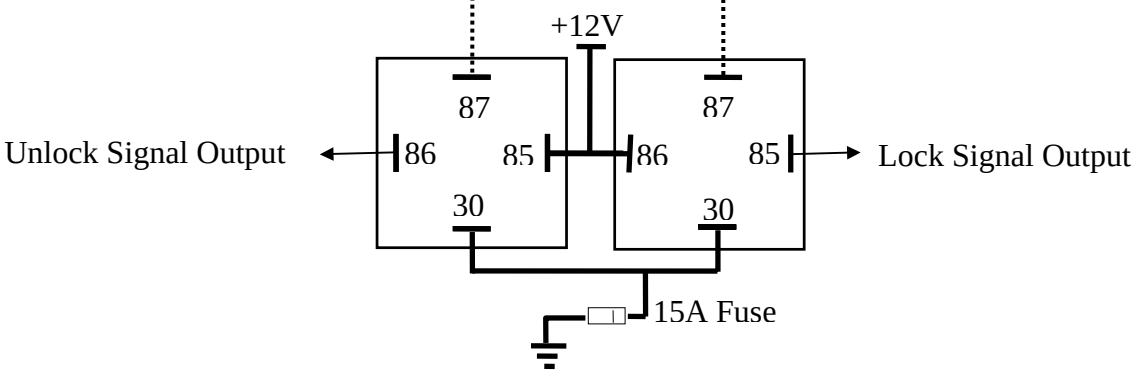
Connect 2 additional relays as shown below & connect Red/Blue & Black Green to +12VDC